EITEL-McCULLOUGH, INC.
SAN BRUNO, CALIFORNIA

450TH

HIGH-MU TRIODE
•
MODULATOR
OSCILLATOR
AMPLIFIER

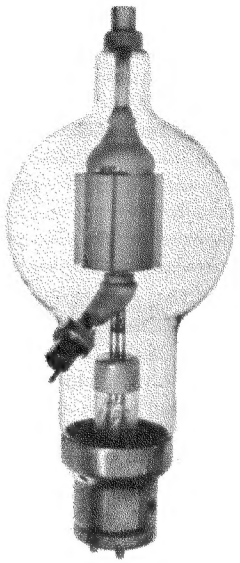

The Eimac 450TH is a high-mu power triode having a maximum plate dissipation rating of 450 watts, and is intended for use as an amplifier, oscillator and modulator. It can be used at its maximum ratings at frequencies as high as 40 Mc.

Cooling of the 450TH is accomplished by radiation from the plate, which exhibits a red-orange color at maximum dissipation, and by means of air circulation around the envelope.

GENERAL CHARACTERISTICS

ELECTRICAL

Filament: Thoriated tungsten		
Voltage	7.5	volts
Current	12.0	amperes
Amplification Factor (Average)	38	
Direct Interelectrode Capacitances (Average		
Grid-plate	5.0	μμfd.
Grid-Filament	8.8	μμfd.
Plate-Filament	0.8	μμfd.
Tranconductance (I_b=500 ma., E_b=4000 v.)	6650	μmhos

MECHANICAL

Base	Special 4-pin, No. 5002B
Basing	RMA type 4AQ
Cooling	Radiation and air circulation
Maximum Overall Dimentions:	
Length	12.625 inches
Diameter	5.125 inches
Net Weight	1 pound
Shipping Weight (Average)	4 pounds

RADIO FREQUENCY POWER AMPLIFIER AND OSCILLATOR

Class-C Telegraphy (Key-down conditions, 1 tube)

MAXIMUM RATINGS (Frequencies below 40 Mc.)

D-C PLATE VOLTAGE	6000 MAX. VOLTS
D-C PLATE CURRENT	600 MAX. MA.
PLATE DISSIPATION	450 MAX. WATTS
GRID DISSIPATION	65 MAX. WATTS

TYPICAL OPERATION (Frequencies below 40 Mc.)

D-C Plate Voltage	3000	4000	5000	volts
D-C Grid Voltage	−175	−200	−300	volts
D-C Plate Current	500	450	450	ma.
D-C Grid Current	95	85	90	ma.
Grid Dissipation	18.4	18	19	watts
Peak R-F Grid Input Voltage (approx.)	400	410	570	volts
Driving Power (approx.)	35	35	46	watts
Plate Power Input	1500	1800	2250	watts
Plate Dissipation	450	450	450	watts
Plate Power Output	1050	1350	1800	watts

AUDIO FREQUENCY POWER AMPLIFIER AND MODULATOR

Class-B (Sinusoidal wave, two tubes unless otherwise specified)

MAXIMUM RATINGS

D-C PLATE VOLTAGE	6000 MAX. VOLTS
MAX-SIGNAL D-C PLATE CURRENT, PER TUBE	600 MAX. MA.
PLATE DISSIPATION, PER TUBE	450 MAX. WATTS
GRID DISSIPATION, PER TUBE	65 MAX. WATTS

TYPICAL OPERATION

D-C Grid Voltage (approx.)	−50	−85	−115	volts
D-C Plate Voltage	3000	4000	5000	volts
Zero-Signal D-C Plate Current	200	150	120	ma.
Max-Signal D-C Plate Current	770	675	620	ma.
Effective Load, Plate-to-Plate	7800	12,800	18,600	ohms
Peak A-F Grid Input Voltage (per tube)	225	235	267	volts
Max-Signal Avg. Driving Power (approx.)	17	14	10	watts
Max-Signal Peak Driving Power (approx.)	40	34	40	watts
Max-Signal Plate Dissipation (per tube)	450	450	450	watts
Max-Signal Plate Power Output	1400	1800	2200	watts

IF IT IS DESIRED TO OPERATE THIS TUBE UNDER CONDITIONS WIDELY DIFFERENT THAN THOSE GIVEN UNDER "TYPICAL OPERATION," AND WHICH POSSIBLY EXCEED MAXIMUM RATINGS, WRITE EITEL-McCULLOUGH, INC., FOR INFORMATION AND RECOMMENDATIONS.

(Effective 11-1-46) Copyright, 1946 by Eitel-McCullough, Inc.

APPLICATION

MECHANICAL

Mounting—The 450TH must be mounted vertically, base up or base down. Flexible connecting straps should be provided from the grid and plate terminals to the external grid and plate circuits. The tube must be protected from severe vibration and shock.

Cooling—Provision should be made for ample circulation of air around the 450TH. In the event that the design of the equipment restricts natural circulation, the use of a small fan or centrifugal blower to provide additional cooling for the tube will aid in obtaining maximum tube life. Special heat-dissipating connectors (Eimac HR-8) are available for use on the plate and grid terminals. These connectors help to prolong tube life by reducing the temperature of the seals.

The grid terminal of the 450TH is now .560" in diameter. To accomodate existing equipment designed for the older style 450TH having .098" diameter grid terminals, an adapter pin is provided with the newer tubes. This adapter pin is threaded so that it may be removed from the grid terminal of the tube. The small grid terminal requires an HR-4 heat-dissipating connector.

ELECTRICAL

Filament Voltage—For maximum tube life the filament voltage, as measured directly at the filament pins, should be the rated value of 7.5 volts. Unavoidable variations in filament voltage must be kept within the range from 7.03 to 7.88 volts.

Bias Voltage—Although there is no maximum limit on the bias voltage which may be used on the 450TH, there is little advantage in using bias voltages in excess of those given under "Typical Operation," except in certain very specialized applications. Where bias is obtained by a grid leak, suitable protective means must be provided to prevent excessive plate dissipation in the event of loss of excitation.

Grid Dissipation—The power dissipated by the grid of the 450TH must not exceed 80 watts. Grid dissipation may be calculated from the following expression:

$$P_g = e_{cmp} I_c$$

where P_g = Grid dissipation,
e_{cmp} = Peak positive grid voltage, and
I_c = D-c grid current.

e_{cmp} may be measured by means of a suitable peak voltmeter connected between filament and grid.[1] In equipment in which the plate loading varies widely, such as oscillators used for radio-frequency heating, care should be taken to make certain that the grid dissipation does not exceed the maximum rating under any conditions of loading.

Plate Voltage—Except in very special applications, the plate supply voltage for the 450TH should not exceed 6000 volts. In most cases there is little advantage in using plate-supply voltages higher than those given under "Typical Operation" for the power output desired.

Plate Dissipation—Under normal operating conditions, the power dissipated by the plate of the 450TH should not be allowed to exceed 450 watts. At this dissipation the brightness temperature of the plate will appear a red-orange in color. The value of this color is somewhat affected by light from the filament as well as from external sources. Plate dissipation in excess of the maximum rating is permissible for short periods of time, such as during tuning procedures.

[1] For suitable peak v.t.v.m. circuits see, for instance, "Vacuum Tube Ratings," **Eimac News**, January, 1945. This article is available in reprint form on request.

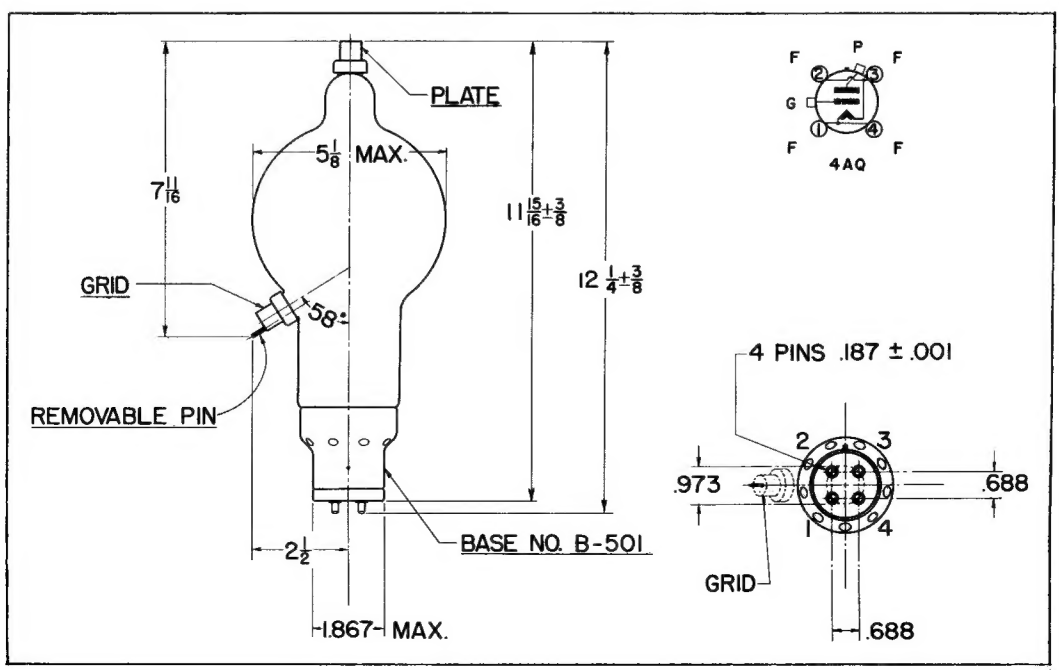

DRIVING POWER vs. POWER OUTPUT

The three charts on this page show the relationship of plate efficiency, power output and grid driving power at plate voltages of 3000, 4000, and 5000 volts. These charts show combined grid and bias losses only. The driving power and power output figures do not include circuit losses. The plate dissipation in watts is indicated by P_p.

Points A, B, and C are identical to the typical Class C operating conditions shown on the first page under 3000, 4000, and 5000 volts respectively.

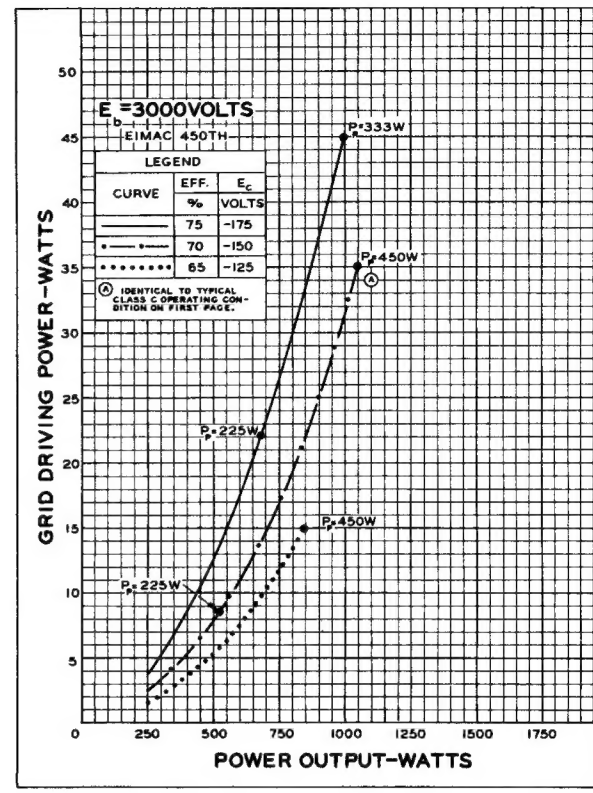

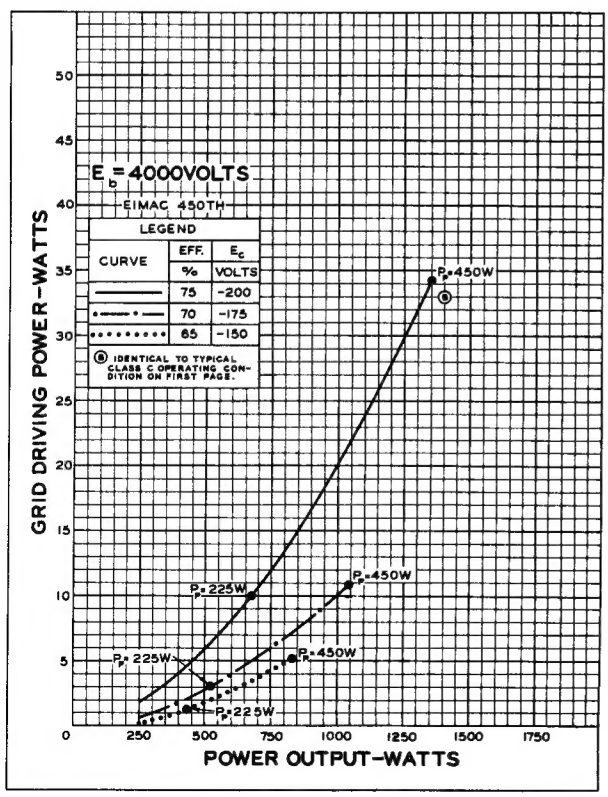

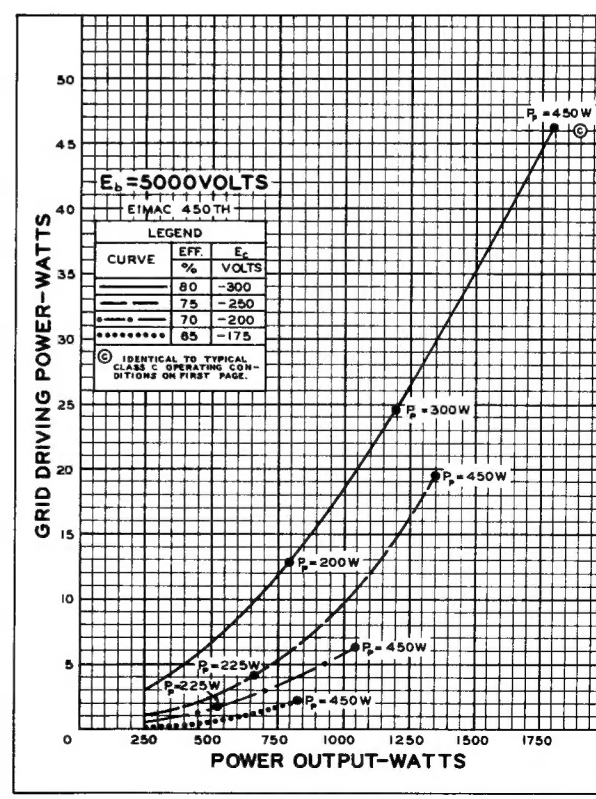

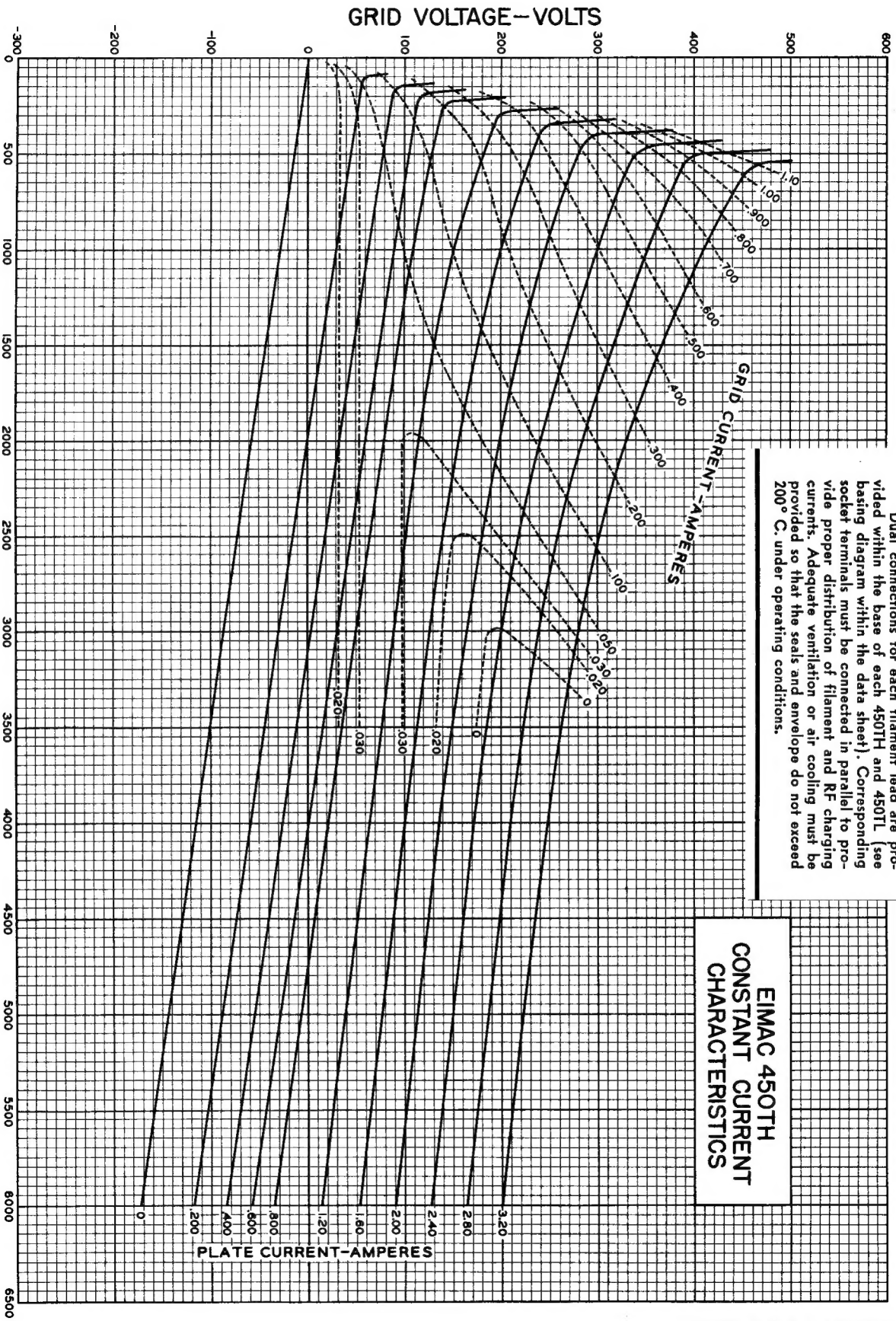

Note:
Dual connections for each filament lead are provided within the base of each 450TH and 450TL (see basing diagram within the data sheet). Corresponding socket terminals must be connected in parallel to provide proper distribution of filament and RF charging currents. Adequate ventilation or air cooling must be provided so that the seals and envelope do not exceed 200° C. under operating conditions.

EIMAC 450TH CONSTANT CURRENT CHARACTERISTICS

PRINTED IN U. S. A. 2-64-22648